BLASTER
EXPLODED VIEW SHEET 1
(600-4209)
FAXBACK DOC #25037

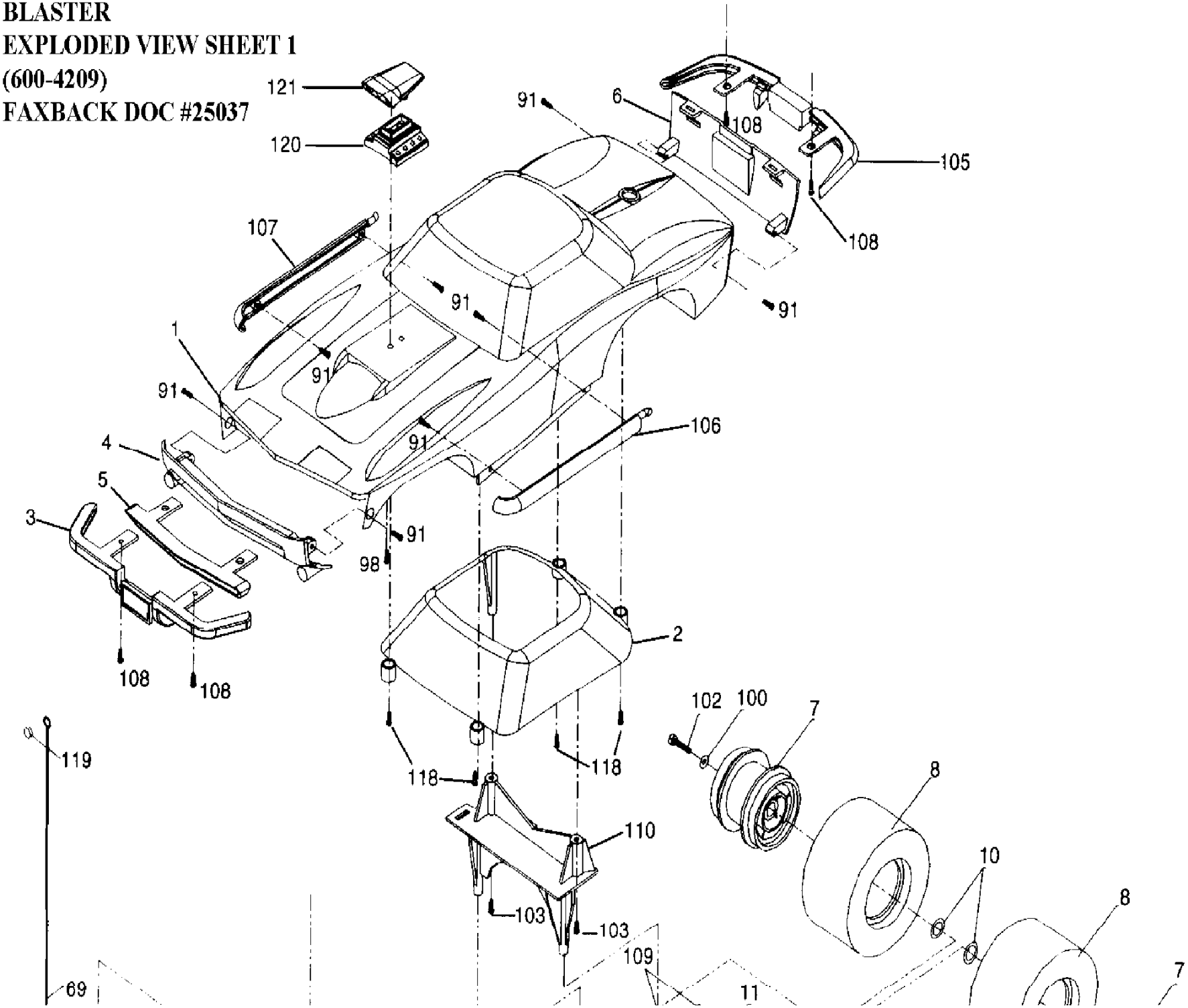

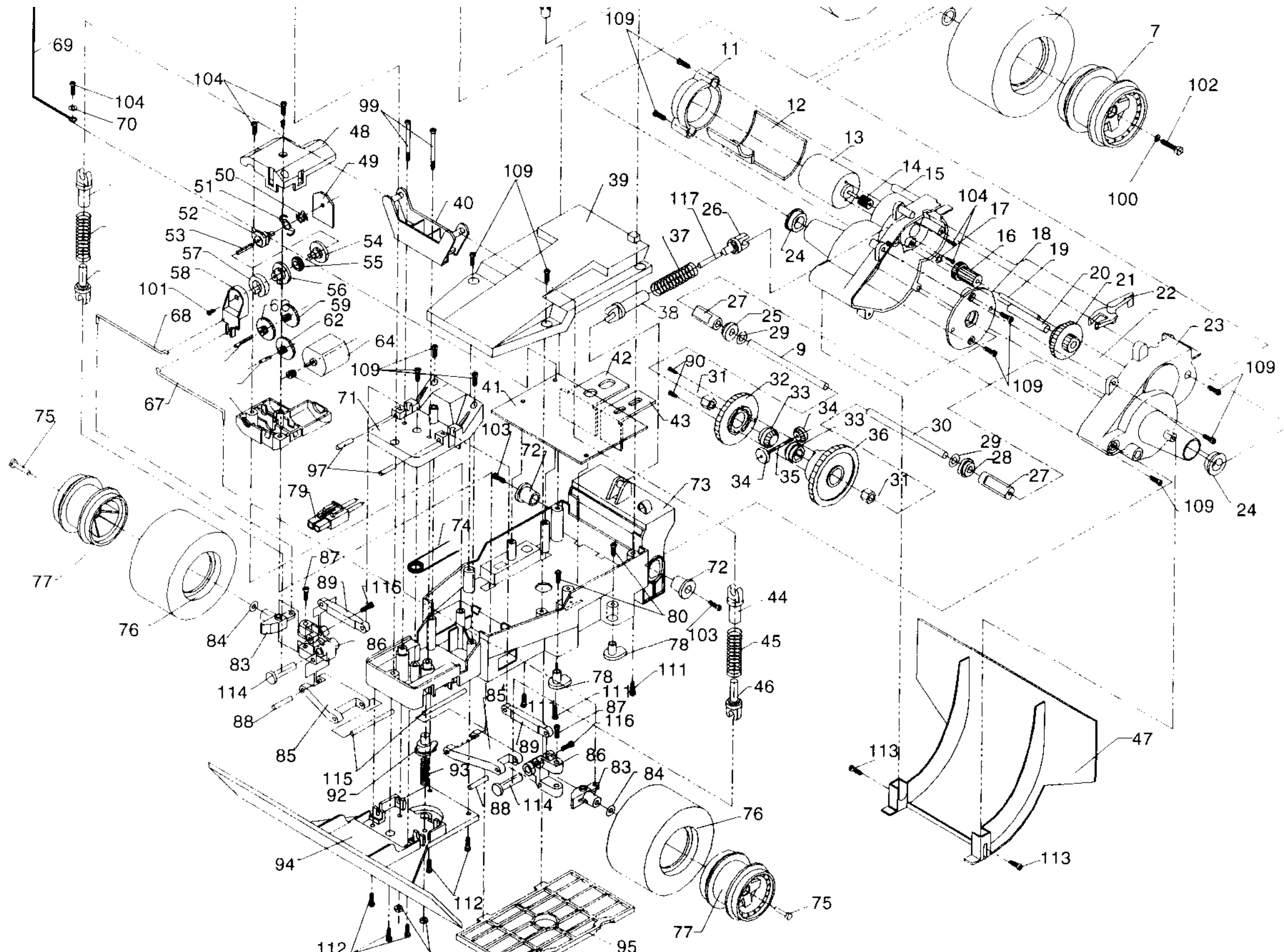

BLASTER
EXPLODED VIEW SHEET 2
(600-4209)
FAXBACK DOC #25037